PARAGON Wall

Compact comfort module

QUICK FACTS

- Cooling, heating and ventilation
- Designed for installation in the rear edge of the room
- Integrated control equipment as an option
- One grille for both the supply air and return air
- Closed unit
- Flexible air flow – VariFlow
- Adjustable air direction - ADC
- CCO valve for maximum capacity

AIR FLOW *			TOTAL COOLING CAPACITY			
80 Pa	(cfm)		Btu/h		Btu/h	
	Nozzle		Variant		Variant	
Size	LL	HH	NC		HC	
775	23.3	50.9	1379	1986	1409	2119
900	27.5	61.4	1621	2399	1662	2556
1100	36.0	80.5	2136	3143	2191	3364
1300	42.4	95.3	2590	3825	2688	4057
1500	38.1	103.8	2467	4098	2658	45184

** Air flow at max. 30 dB(A)*

Pi = 0.32 in.wg, ΔT_l = 10.8°F, ΔT_{mk} = 15.3°F, Water; 0.8 gpm, 57.2°F in.

Swegon

Contents

Technical description

PARAGON WALL Comfort module

Paragon Wall has been developed for creating a well-performing indoor climate in offices where technical installations are meant to be located in the rear edge of the room.

Strong focus has been directed on a high degree of comfort, low installation costs as well as low running costs in this application. Since the Paragon Wall is driven by a central air handling unit, there is no built-in fan that would otherwise generate sound and require servicing. Through patent-pending technology, the built-in coil is optimally utilized which provides high cooling/heating capacity already while the air pressure and airflows are low.

By using the same grille for both the distribution of supplied air and the recirculation of room air, PARAGON WALL makes a technical installation outside the relevant room possible. This offers several important benefits. By utilising the space above the false ceiling in the adjoining corridor, service can be carried out in the corridor without the need for access to the room served by the unit. With only one grille to take into consideration, only one opening needs to be cut in the wall. PARAGON WALL is, of course, equipped with VariFlow and ADC for simple adjustment of the air flow and direction of air discharge. Vertical air discharge direction can also be set simply by adjusting the angle of the louvers in the grille.

Figure 1. PARAGON WALL

PARAGON WALL in a nutshell

- Plug & Play
- Factory-fitted control equipment is optional.
- Low sound level
- Draft-free indoor climate
- No fan in the room
- Dry system without condensation
- No need for any condensate system
- No filter
- Requires minimal maintenance
- Low energy consumption
- Flexible adjustment of the air volume (VariFlow)
- Guaranteed comfort through flexible adjustment of the direction of air discharge (ADC)

www.eurovent-certification.com
www.certiflash.com

Outstanding features of the PARAGON WALL comfort module

Paragon Wall is the name of a new comfort module that is part of the family of compact comfort modules and is designed especially for rear-edge location in office rooms.

The module is installed above the false ceiling in the corridor outside the room and requires no false ceiling inside the room. By using the same grille both for distribution of supply air and the recirculation of room air, only one grille is visible inside the room.

The Paragon Wall product family includes the following variants:

PARAGON Wall c B-NC
Normal capacity Paragon with 4 pipe coil, that is separate cooling and heating coils

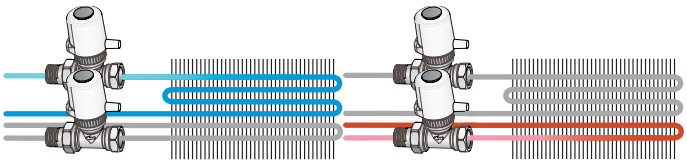

PARAGON Wall c B-HC (CCO)
Paragon Wall B-HC CCO is a high capacity variant of Paragon Wall where a CCO valve Compact Change Over is used to utilise the whole coil of both cooling and heating.

Advantages:

- Compact PARAGON Wall unit with high output means simpler project planning.
- Smaller units can be used. Lower investment cost and less space needed.
- Faster conditioning of a room that has been left empty. High and consistent comfort
- Permits a higher cooling water temperature and lower heating water temperature, which gives lower operating costs for the chiller and heat pump, i.e. less environmental impact.

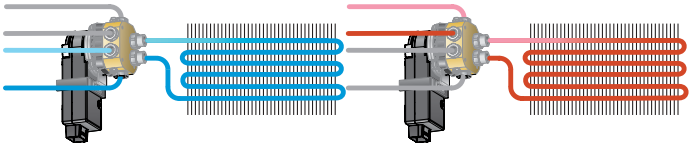

Room control system CONDUCTOR is used to control the CCO valve. For more information about the CCO valve, see the CCO product data sheet at www.swegon.com

PARAGON Wall c A-HC
High capacity Paragon for cooling only. The capacity of the heat exchanger is utilised optimally by maximising the cooling circuit through the coil.

- Lower energy consumption gives a lower operating cost and with that less environment impact.
- A smaller Paragon unit than before can be used, which results in a lower investment cost and more space for other installations
- The high output gives faster cooling of hotel rooms that have stood empty.

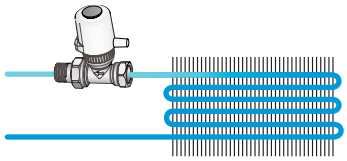

Basic function diagram

Offices

The primary air is supplied via duct connection in the rear edge of the unit and this builds up positive pressure inside the unit. The positive pressure distributes the primary air with relatively high velocity via two rows of nozzle, one row in the upper edge and one row in the lower edge of the outlet. The high velocity of the primary air creates negative pressure which generates induction of the room air.

The recirculation air is drained into the unit through the same grille that is used for distributing air into the room.

The recirculation air is then conveyed through the coil where it is cooled, heated, if required, or just passes untreated, before it mixes with the primary air and is discharged into the room.

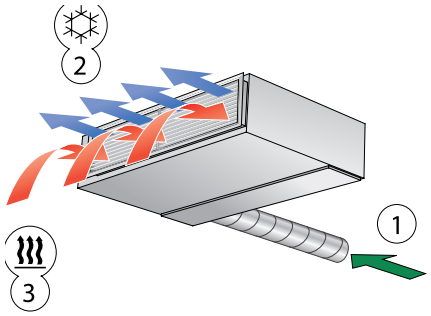

Figure 2. Cooling function Paragon Wall
1 = Primary air
2 = Primary air mixed with chilled room air
3 = Induced room air

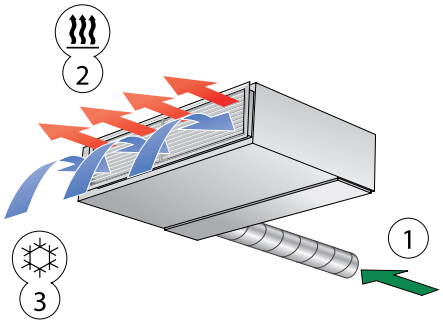

Figure 3. Heating function Paragon Wall
1 = Primary air
2 = Primary air mixed with heated room air
3 = Induced room air

The air is ideally distributed to rooms by discharging it in a fan shape and utilising as much of the ceiling and any intermediate walls as possible for preventing drafts in the occupied zone.

Horizontal air distribution is achieved by means of the ADC (Anti-Draft Control) feature. If vertical air distribution is desirable, this is achieved by setting the outlet grille vanes to slant upward or downward.

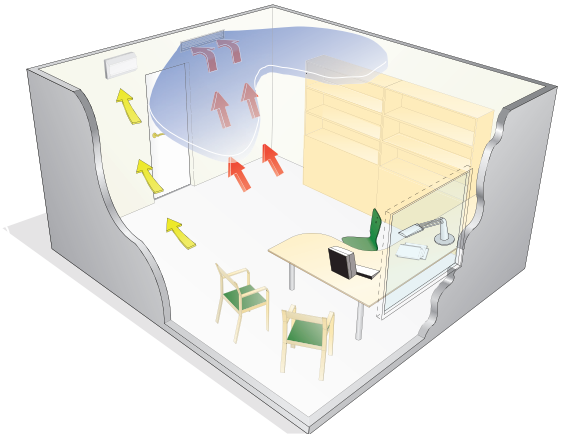

Figure 4. Air distribution with the Paragon Wall in a separate office room

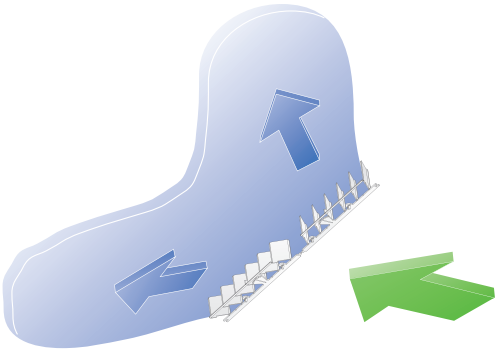

Figure 5 – Horizontal air distribution with ADC

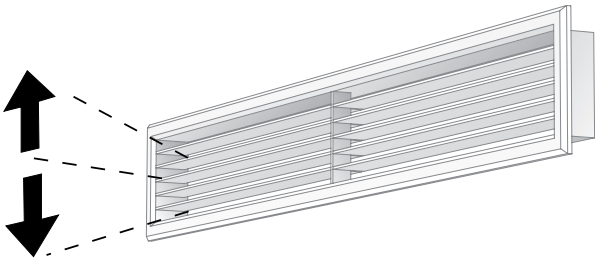

Figure 6. Vertical air distribution with adjustable louvres in the supply air grille.

Nozzle setting

Figure 7. Adjusted nozzle L

Figure 8. Adjusted nozzle M

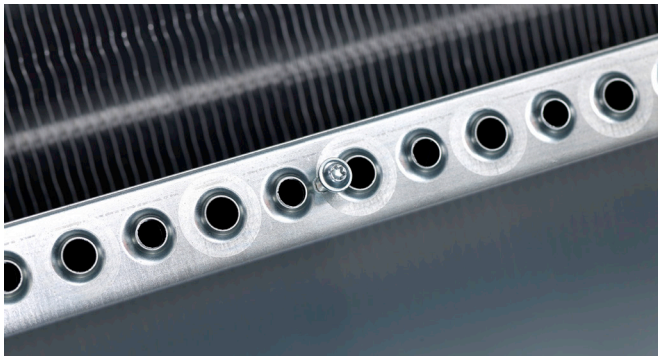

Figure 9. Nozzle H. Strip removed

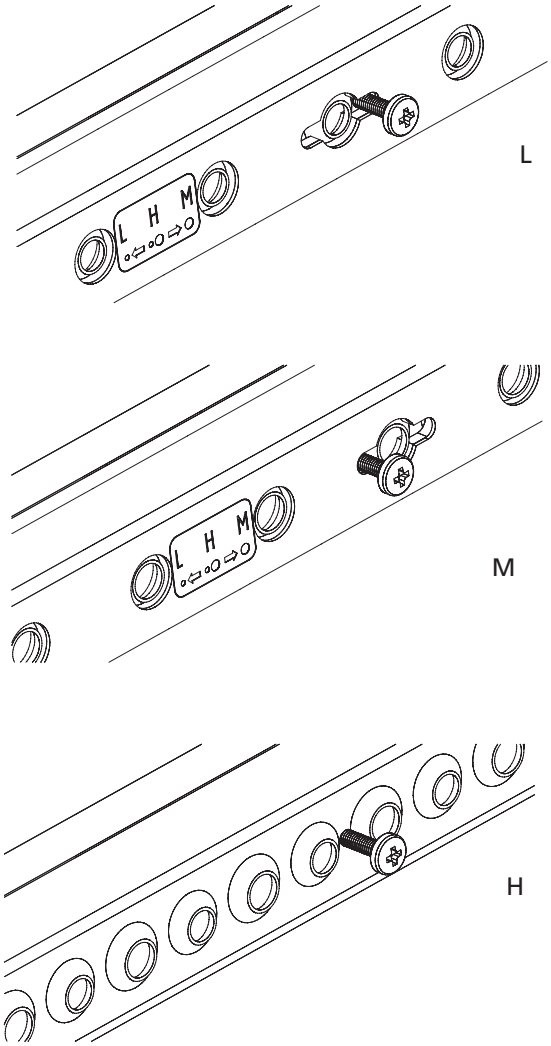

Figure 10. Adjustment of nozzles L, M and H

(The strip for nozzle H has been removed)

Optional Extras

CONDUCTOR Control equipment

Energy efficient

The control equipment for the Paragon Wall in the standard version is based on the CONDUCTOR in order to save on energy to the fullest possible extent. The CONDUCTOR is Swegon's in-house designed controller specially designed for controlling water-borne and airborne indoor climate systems.

The W4.1 application used in combination with the PARAGON WALL demand-controls both the room temperature and the air quality in the room. When someone is in the room, the functions of the controller adapt to provide comfort feed-back control. If no one is in the room, the controls activate the economy comfort mode, allowing the room temperature to deviate more from the preset setpoint. At the same time, the system reduces the air flow to the relevant room to a minimum in order to save fan energy. In addition, there are a number of other functions for both comfort and energy feed-back control coupled to temperature deviations, open/closed windows and possible condensation precipitation.

Communication

CONDUCTOR has been developed as a subsystem in Swegon's electrical and control equipment platform. The GOLD air handling units, used in combination with the Super WISE communication unit, offer unique opportunities for achieving energy-efficient applications all the way from the room level and up to the plant room.

The CONDUCTOR communicates via Modbus RTU Main control systems can access the entire list of parameters for both reading and writing values.

Simple installation and simple maintenance

Factory-fitted control equipment makes the installation work simple. All the necessary components are then easily accessible via an easy-to-remove inspection cover in the underside of the unit.

The room controller included in the supply communicates wirelessly or via wired connection to the comfort module controller. Wireless communication reduces the costs for running cables. On the other hand, a wired connection reduces the need for maintenance since the user then does not need to periodically replace batteries.

For more information regarding the CONDUCTOR, see separate product data sheet.

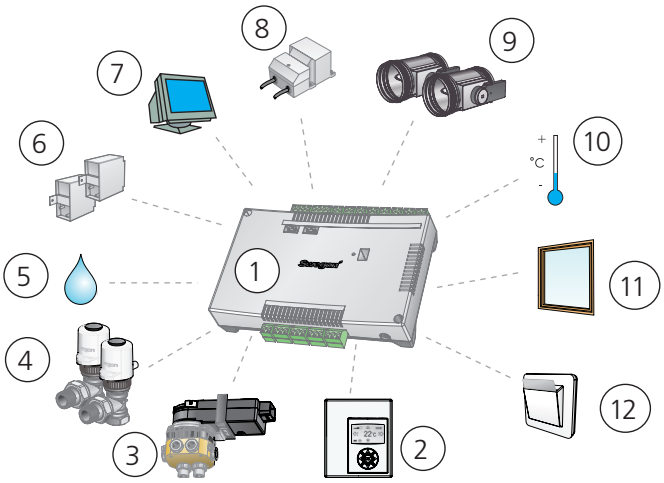

Figure 11. Factory-fitted control equipment CONDUCTOR W4.1

1 = Controller

2 = Room controller

3 = CCO valve and actuator (variant B-HC)

4 = Valves and valve actuators for cooling and heating water (variant B-NC and A-HC)

5 = Condensation sensor

6 = Pressure sensor

7 = Communication via Modbus RTU

Accessories, if required:

8 = Transformer

9 = Motorised ventilation damper

10 = External temperature sensor

11 = Window contact

12 = Key card holder or presence sensor

6-way change over valve - CCO

With CCO - Compact Change Over, the same single circuit in the coil is used for both heating and cooling, providing maximum utilisation of the coil and thus a higher cooling and heating capacity.

Advantages:

- A higher cooling water temperature and lower heating water temperature give improved operating economy for the chiller and heat pump. Lower energy consumption gives lower operating cost and less environment impact.
- Smaller PARAGON units can be used. Lower investment cost and less space needed.
- Faster conditioning of an office that has been left unoccupied. High and consistent comfort.
- Compact unit with high output means simpler project planning.

PARAGON together with the connectable control system CONDUCTOR make a very good comfort solution in offices. CONDUCTOR is also used to control the CCO valve.

If an occupancy detector is used and when this indicates occupancy, the air flow increases from the economical low flow to the normal flow, while the temperature adjusts to the comfort level.

When the room is empty, the ventilation and temperature return to economic low flow.

In addition to the automatic room control, the user can manually adjust the temperature and air flow.

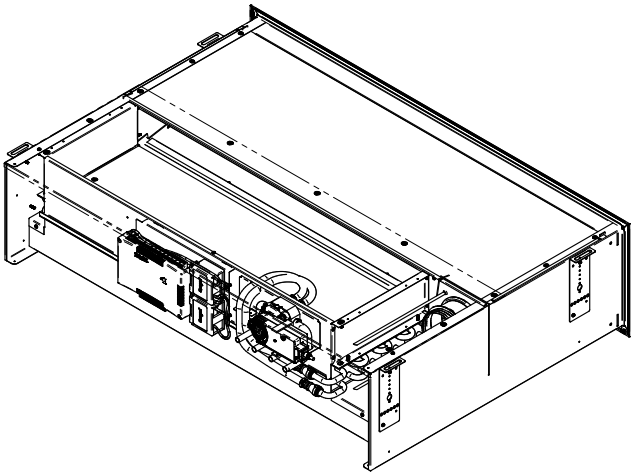

Figure 12. Factory-fitted CONDUCTOR with CCO valve

PARAGON WALL B-HC

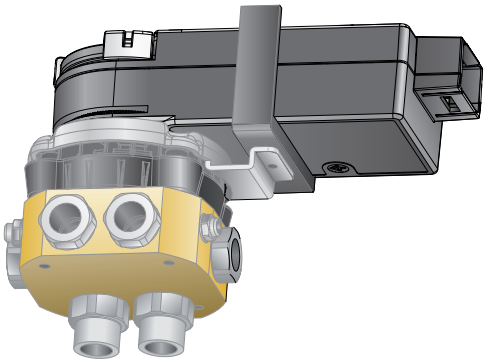

Figure 13. CCO 6-way valve

Sizing

Recommended limit values, water

Max. recommended operating pressure (across coil only):	230 psi
Max. recommended test pressure (across coil only):	350 psi
Max. recommended pressure drop across a standard valve:	3 psi
Max. recommended pressure drop across the CCO valve	3 psi
Min. permissible heating water flow:	0.21 gpm
Max. permissible supply flow temperature:	140 °F
Min. permissible cooling water flow:	0.63 gpm
Lowest permissible supply flow temperature:	Should always be dimensioned so that the system works with out condensation

Planning with ProSelect

Both planning and sizing are made easier by using Swegon's ProSelect Project design computer program. ProSelect is available at Swegon's home page: www.swegon.com.

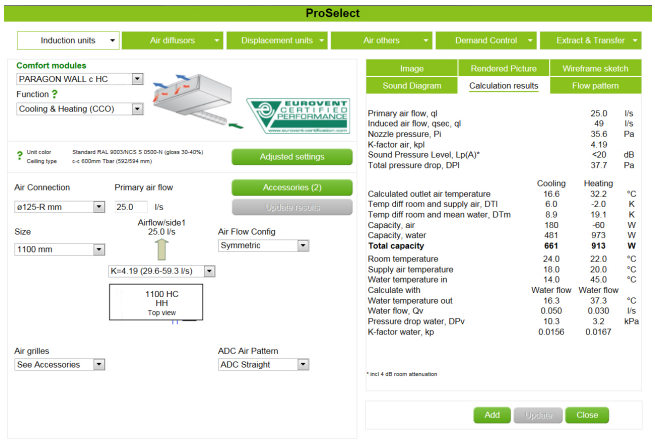

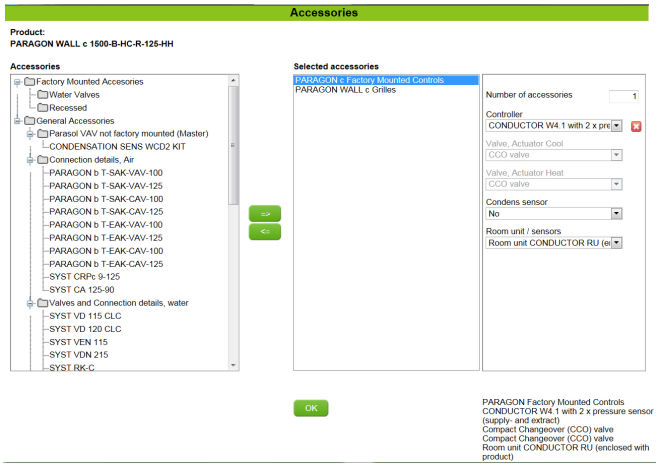

Acoustics

Natural attenuation

Natural attenuation is the total reduction in sound power from duct to room including the end reflection of the unit.

Table 17 – Natural attenuation with cladding

Natural attenuation (dB) at mid frequency f (Hz) ΔL_w [dB]							
63	125	250	500	1k	2k	4k	8k
24	14	9	6	9	14	14	18

Accessories

Supply air kit – PARAGON T-SAK-VAV

A motor-driven damper is needed in applications where the user wants to demand-control the supply air by means of CONDUCTOR control equipment The damper causes a certain amount of flow-generated sound. Therefore a sound attenuator is also needed to guarantee a low sound level in the room. The following components are included in PARAGON T-SAK-VAV:

Motor-driven damper	CRTc including Swegon's motor
Sound attenuator	CLA rectangular sound attenuator with circular connection spigots L=19.7 in.

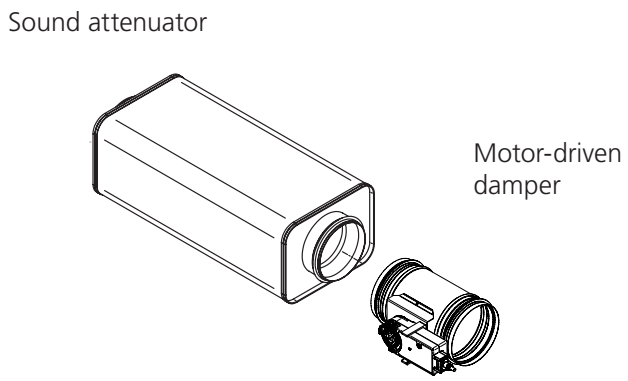

Figure 16. PARAGON T-SAK-VAV

Supply air kit – PARAGON T-SAK-CAV

A commissioning damper is needed to ensure the correct air flow if a simpler feed-back control system with constant air flow has been selected. Commissioning dampers also generate a certain amount of sound. We therefore recommend the use of a sound attenuator for keeping the sound level at a minimum. The following components are included in PARAGON T-SAK-CAV:

Commissioning damper	CRPc-9 Commissioning damper with perforated damper blade and manually adjustable blade
Sound attenuator	CLA rectangular sound attenuator with circular connection spigots L=19.7 in.

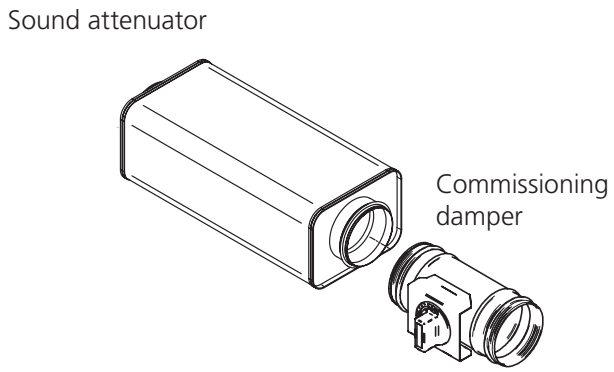

Figure 17. PARAGON T-SAK-CAV

Exhaust air kit – PARAGON T-EAK-VAV

If the supply air is demand-controlled, the exhaust air also needs to be feed-back controlled. An exhaust air kit is needed for balancing the supply air and the exhaust air. Precisely like the supply air kit, this kit consists of a motor-driven damper and a sound attenuator. In addition an exhaust air register and two alternative mounting frames are included: one with a nipple and one with a joint.

Motor-driven damper	CRTc including Swegon's motor
Sound attenuator	CLA rectangular sound attenuator with circular connection spigots L=19.7 in.
Exhaust air register	EXCa and accompanying mounting frames: one with a nipple and one with a joint

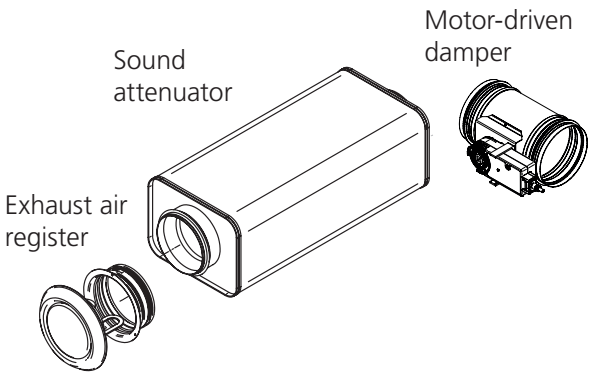

Figure 18. Exhaust air kit – PARAGON T-EAK-VAV

Exhaust air kit – PARAGON T-EAK-CAV

A commissioning damper is needed in systems with constant airflows in order to balance the exhaust air flow with the supply air flow.

Therefore a kit designed for constant airflows is available for simpler systems.Ø This kit contains commissioning damper, sound attenuator, exhaust air register and mounting frames.

Commissioning damper	CRPc-9 Commissioning damper with perforated damper blade and manually adjustable blade
Sound attenuator	CLA rectangular sound attenuator with circular connection spigots L=19.7 in.
Exhaust air register	EXCa and accompanying mounting frames: One with a nipple and one with a joint

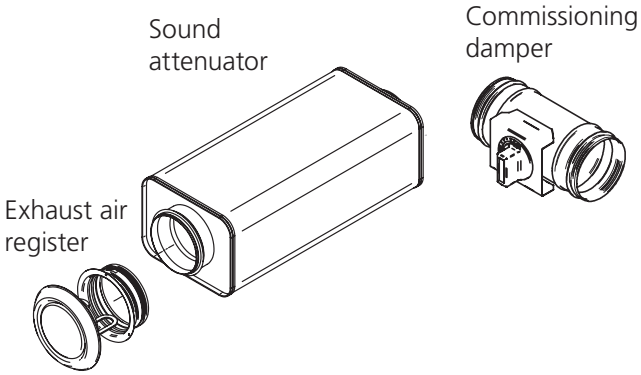

Figure 19. Exhaust *air kit PARAGON T-EAK-CAV*

Suspension kit SYST MS M8

In the applications in which the Paragon Wall is not mounted in direct contact with the ceiling, a suspension kit is available which simplifies the task of lowering it to hang at the level desired.

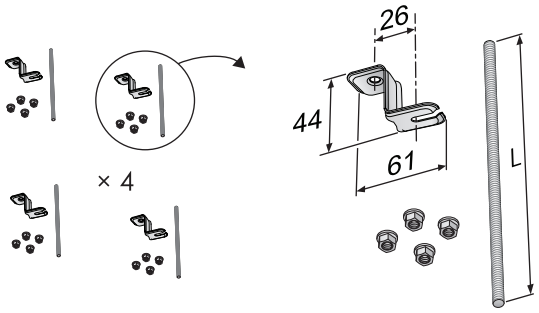

Figure 20. Suspension kit SYST MS M8

Venting nipple

A venting nipple with push-on connection can be utilised in combination with type SYST FS F20 flexible hoses. This is normally not needed, but can be an option if the coil in the paragon Wall is at the highest point on the water loop.

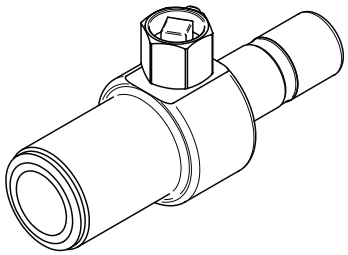

Figure 22. Venting nipple, SYST AR

Flexible hoses

In applications in which you desire to avoid risk of movement in the pipe system caused by heat expansion, you can advantageously utilize flexible hoses for the connection of chilled water and hot water. Eventual vibrations via the pipe system are at the same time diminished to an absolute minimum.

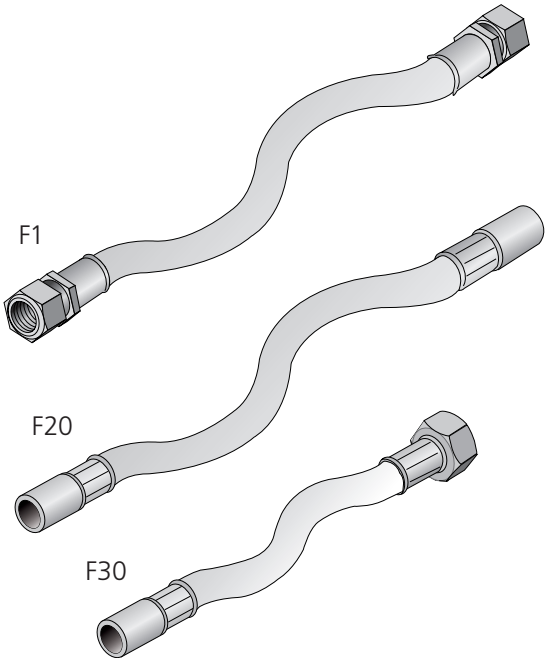

Figure 21. Flexible connection hose, SYST FH

Factory-fitted control equipment

Optional: Orders can be placed for factory-fitted control equipment for the PARAGON Wall.

All the options and possible combinations of the same that are sizable in ProSelect are tabulated below.

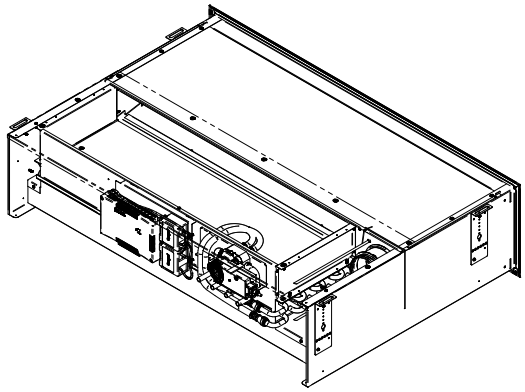

Figure 23. Paragon Wall with factory-fitted Conductor W4.1 controller including RU room unit and 2 pressure sensors as well as CCO valve for cooling and heating.

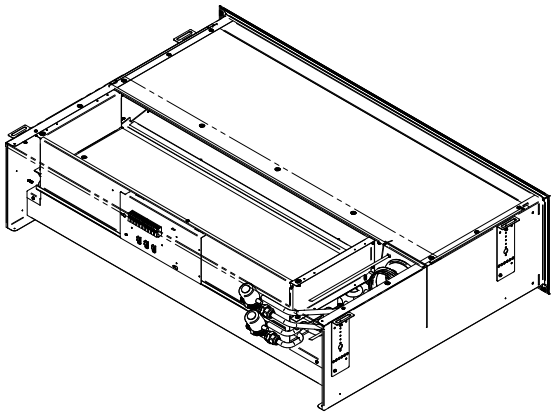

Figure 24 Paragon Wall with factory-fitted LUNA wiring terminals, VEN115 valve and actuator ACTUATORb 24V NC.

ProSelect

ProSelect is Swegon's sizing program, available at www.swegon.com.

Several options and combinations can be sized in ProSelect. The factory-fitted control equipment described in figures 23 and 24 is shown below as an example.

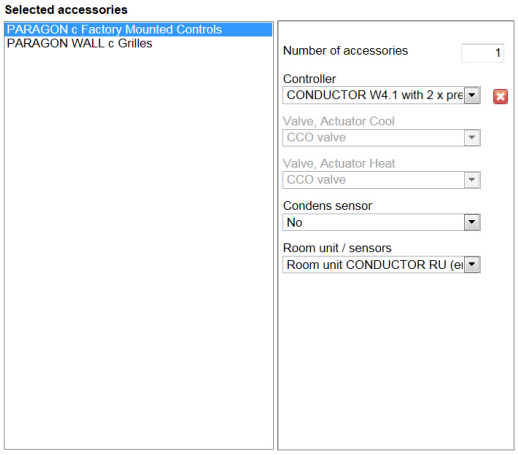

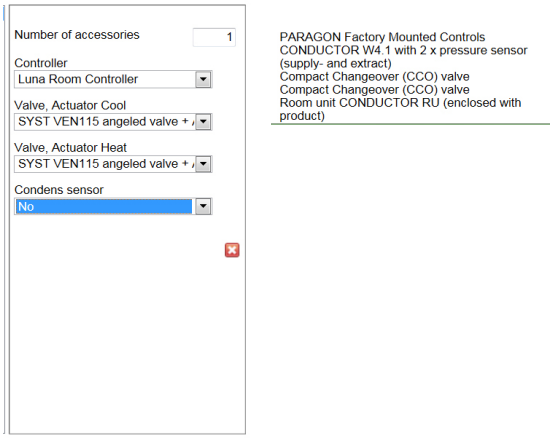

PARAGON Factory Mounted Controls
LUNA Controller enclosed, connection plinth is attached on product
SYST VEN115 angeled valve + ACTUATOR b 24V NC
SYST VEN115 angeled valve + ACTUATOR b 24V NC

Table 18. Factory-fitted accessories

All the options below and all the possible combinations of the same can be sized in ProSelect.
Conductor RE W4.1 controller incl. RU room unit and mounted pressure sensor for supply air.
Conductor RE W4.1 controller incl. RU room unit and two mounted pressure sensors for supply/exhaust air.
SYST VEN115 straight valve
Straight valve SYST VEN115 + ACTUATORb 24V NC actuator wired to terminals
Only ACTUATORb 24V NC actuator wired to terminals
Condensation sensor, wired to terminals
Temperature sensor, wired to terminals (Only in combination with Conductor RE)

Installation

Installation

The PARAGON Wall is delivered with four mounting brackets designed for installation directly against the ceiling or installation suspended from the ceiling. The mounting brackets allow a certain amount of further adjustment after the comfort module/ceiling mounting brackets has/have been mounted as accurately as possible. This enables you to position the supply spigot correctly in relation to the wall and the grille. The next step is to connect the air duct, cooling pipes, heating pipes and power supply (24 V AC) to the control equipment. The motor dampers can be directly wired into the controller in the Paragon Wall, if a supply air kit and an extract air kit are included in the installation. The SYST MS M8 suspension kit (must be ordered separately) can be used to advantage in applications in which the PARAGON Wall should not be mounted directly against the ceiling. For detailed mounting instructions, see separate document available for downloading at www.swegon.com.

Paragon Wall will be supplied with 1/2" mpg connections at the coil. When hoses are supplied, building end connections can be 1/2" mpg or 1/2" compression fitting.

Air connection

A 5 in. Ø air duct including gasket should be connected directly to a fixed ducting.

If the supply air kit is included in the installation, connect the parts in the following order, viewed from the Paragon Wall:

1. PARAGON WALL Comfort module
2. Air duct, 5 in Ø
3. Sound attenuator, CLA
4. Air duct, 5 in Ø
5. CRT motor-driven damper

Note that the supply and extract air kits are also available in 4 in. Ø. This kit is suitable for use if the space is limited and low airflows are discharged into the room.

Connection of control equipment

CONDUCTOR

If the CONDUCTOR control equipment is supplied in factory-fitted condition, the actuator (cooling and heating) is wired to the controller on delivery. The controller must be energized in order to start up the feed-back control functions. This occurs either through the supply of power via a 24 V AC network or through the addition of a separate transformer.

The transformer is available as accessory and must be ordered separately. Note that a transformer normally supplies enough current to operate up to 6 Paragon Wall units with factory-fitted CONDUCTOR under the condition that the units are situated within a reasonable distance, to avoid too drastic voltage drops in the cables.

The room controller is delivered well packaged together with the Paragon Wall. The room controller can either operate with wireless remote control or have a wired cable connection. If the controller operates through wireless communication, 4 size AAA batteries supply it with power. If cable connection is used, the room unit is supplied with power via the same cabling used for communication between the module controller and the room controller. As soon as the module controller and the room controller are energized, you simply enter the ID number of the module controller into the room controller to start wireless communication. If the room controller is connected via a cable, you are not required to enter any ID number.
There are several accessories available to special order for utilizing the energy saving functions available in the CONDUCTOR with application W4.1 (standard). The motor operated dampers can be easily wired directly to the controller, if the supply and extract air kits are included in the installation.
For hotels there is provision for connecting a key card holder intended to serve as a presence sensor. Of course traditional presence sensors can also be connected, if they are required. There is also an input for a window contact (not accessory), which can be utilized for saving energy when the window is opened. For more information regarding CONDUCTOR W4.1, see the separate product data sheet.

Maintenance

Since the Paragon Wall operates without any built-in fan, without filter and without a drainage system, very little maintenance is required. In a hotel room or a hospital room, it is normally sufficient to vacuum clean the back side of the coil every six months to remove loose dust. A simple visual inspection of connections and wiping the supply air grille and the condensate drip tray with a damp cloth is also recommended. Avoid aggressive cleaning agents which may harm painted surfaces. Normally a mild soap or alcohol solution is fully adequate for cleaning. Note that the dry operation without condensation minimises the risk of bacteria growth that otherwise is occurs in wet systems.

The requirement for maintenance is yet lower in an office room, since this type of environment is normally much more dust-free, and this allows longer intervals between scheduled maintenance. It is normally enough to clean the coil in an office room once every second year.

Dimensions and weights

Table 19 – Weight

PARAGON Wall c B-NC / PARAGON Wall c A-HC		
	RY	RN
L	Dry, lbs	Dry, lbs
775	49.8	45.9
900	56.2	51.6
1100	65.0	59.3
1300	74.5	67.9
1500	82.4	78.4
PARAGON Wall c B-HC (CCO)		
	RY	RN
L	Dry, kg	Dry, kg
775	54.7	50.7
900	61.1	56.4
1100	69.9	64.1
1300	79.4	72.7
1500	87.7	80.2
RY: Connection side R = Right; Supply/extract air grille with spigot Y = Yes		

Table 20 – Water volume

PARAGON Wall c B-NC		
	Water volume, l (gal)	
L	Cooling	Heating
775	0.21	0.08
900	0.26	0.11
1100	0.34	0.13
1300	0.40	0.16
1500	0.48	0.18
PARAGON Wall c A-HC		
	Water volume, l (gal)	
L	Cooling	Heating
775	0.29	
900	0.34	
1100	0.45	
1300	0.53	
1500	0.63	
PARAGON Wall c B-HC (CCO)		
	Water volume, l (gal)	
L	Cooling or heating	
775	0.29	
900	0.34	
1100	0.45	
1300	0.53	
1500	0.65	

PARAGON WALL (R) Right connection

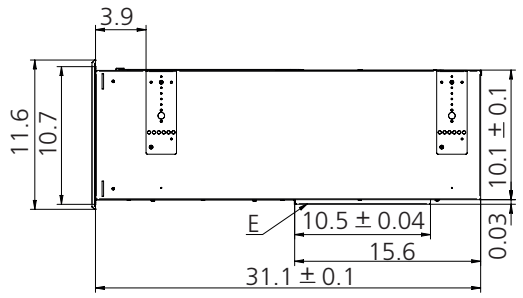

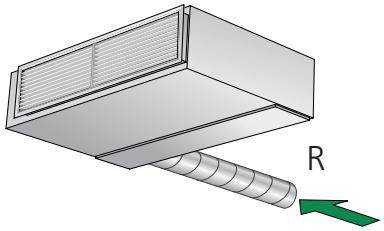

Figure 25. End view (E = Condensate drip tray)

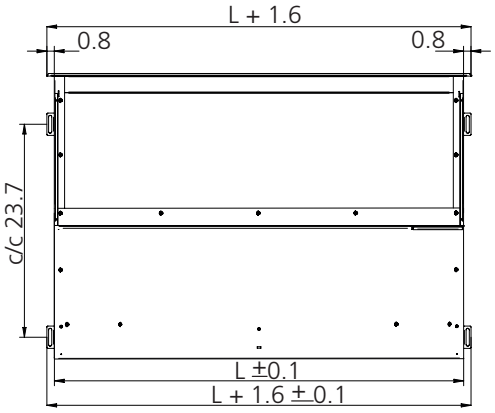

Figure 26. View from above.

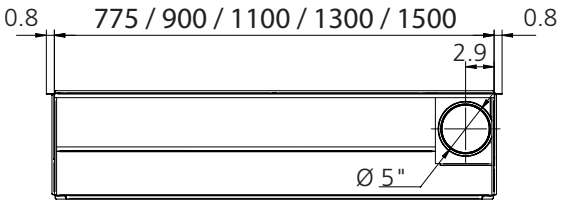

Figure 28. View seen from the rear, air connection R, right side.

Model	L	L + 1.6	L/2
775	30.5	32.1	15.25
900	35.4	37.0	17.7
1100	43.3	44.9	21.65
1300	51.2	52.8	25.6
1500	59.1	60.7	29.55

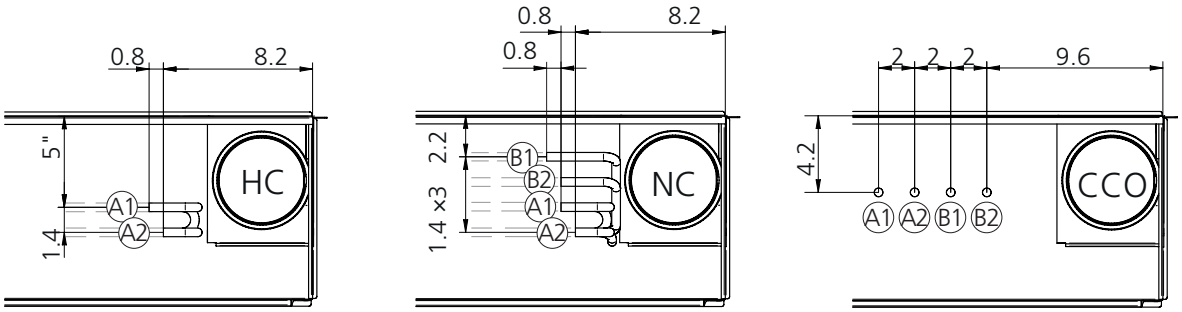

Figure 27. View rear, water connection.

PARAGON WALL (L) Left connection

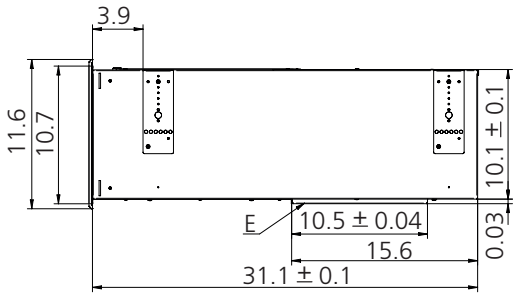

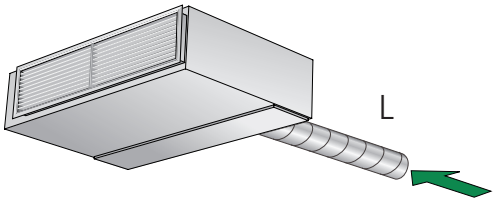

Figure 29. End view

E = Condensate drip tray

Model	L	L + 1.6	L/2
775	30.5	32.1	15.25
900	35.4	37.0	17.7
1100	43.3	44.9	21.65
1300	51.2	52.8	25.6
1500	59.1	60.7	29.55

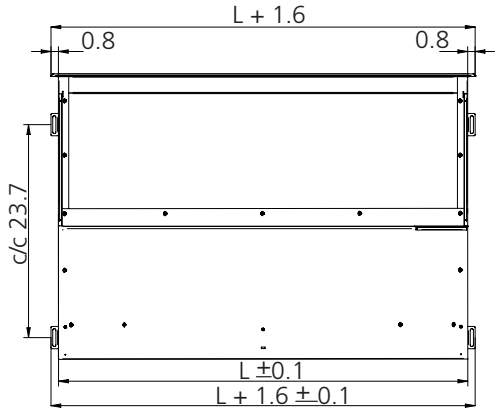

Figure 30. View from above.

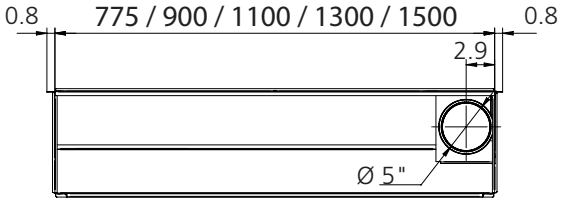

Figure 32. View seen from the rear, air connection L, left side.

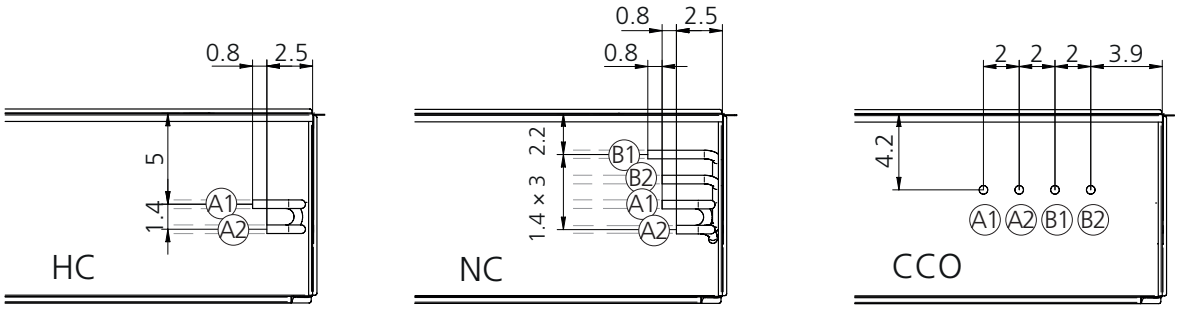

Figure 31. View rear - water connections,

A1 = Cooling water, inlet pipe Ø12x1.0 mm (Cu)
B1 = Heating water, inlet water Ø12x1.0 (Cu)
A2 = Cooling water, return Ø12x1.0 mm (Cu).
B2 = Heating water, return Ø12x1.0 (Cu).

Dimensions, accessories

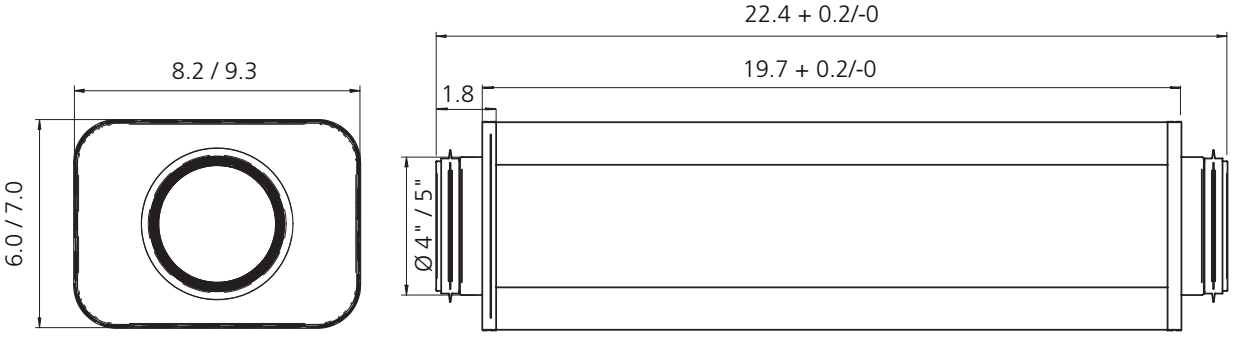

Figure 33. Dimensional drawing sound attenuator CLA Ø 4" – 19.7 or Ø5" – 19.7
The following components are included in PARAGON T-SAK and PARAGON T-EAK:

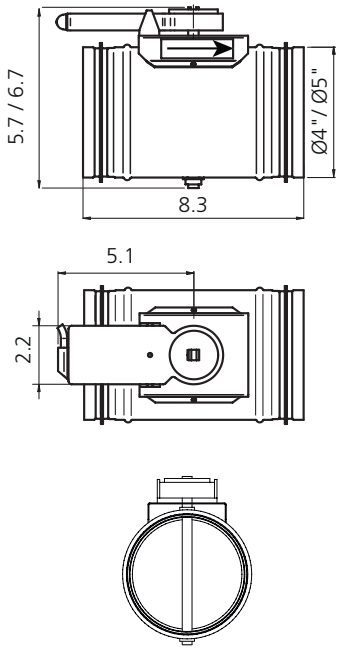

Figure 34. Dimensional drawing motor-driven damper.
Included in PARAGON T-SAK-VAV and PARAGON T-EAK-VAV

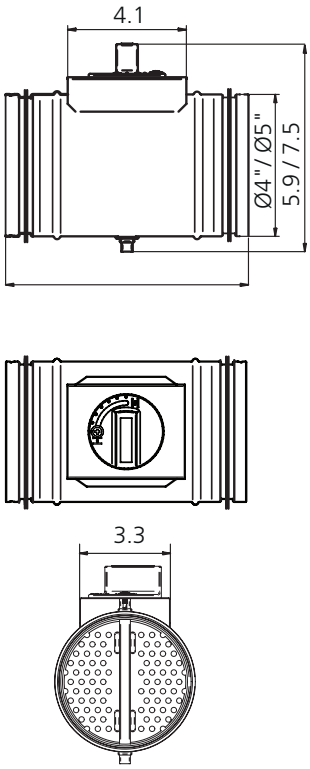

Figure 35. Dimensional drawing commissioning damper.
Included in PARAGON T-SAK-CAV and PARAGON T-EAK-CAV

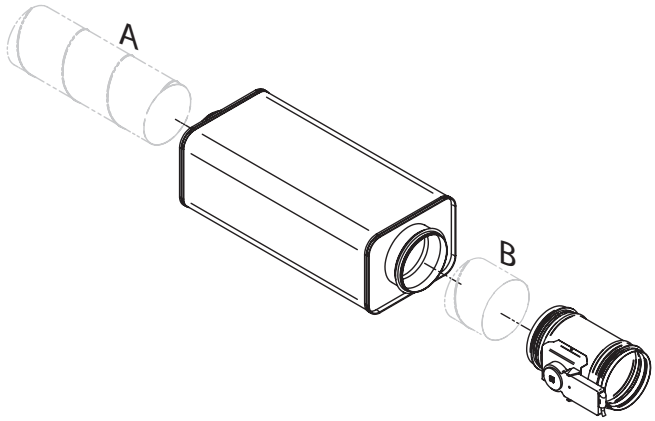

Figure 36. Supply air kit PARAGON T-SAK-VAV-125
Spiral duct not included.
Spiral duct A: Min. length: 13 in
Spiral duct B: Min. length: 2.75 in

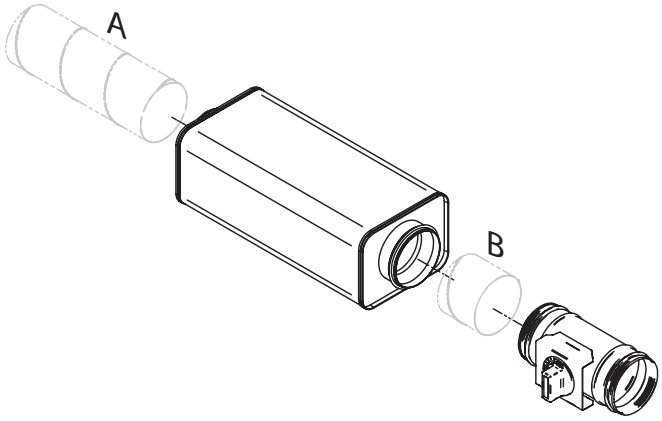

Figure 38. Supply air kit PARAGON T-SAK-CAV-125
Spiral duct not included.
Spiral duct A: Min. length: 13 in
Spiral duct B: Min. length: 2.75 in

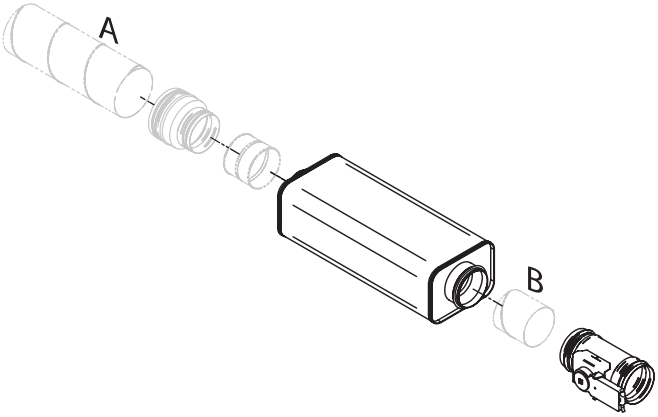

Figure 37. Supply air kit, PARAGON T-SAK-VAV-100
Spiral duct and jointing sleeves dim. 100 not included.
Spiral duct A: Min. length: 13 in
Spiral duct B: Min. length: 2.75 in

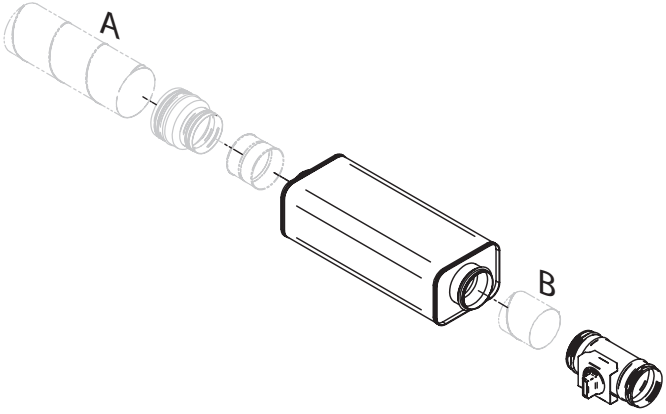

Figure 39. Supply air kit, PARAGON T-SAK-CAV-100
Spiral duct and jointing sleeves dim. 100 not included.
Spiral duct A: Min. length: 13 in
Spiral duct B: Min. length: 2.75 in

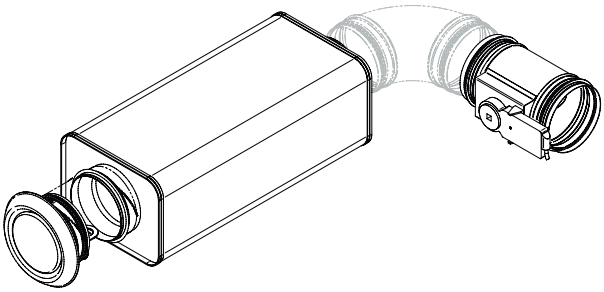

Figure 40. Exhaust air kit – PARAGON T-EAK

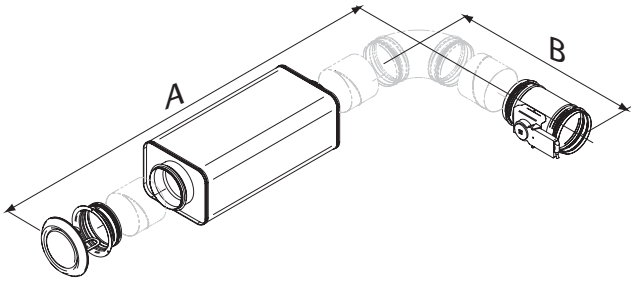

Figure 41. Exhaust air kit, PARAGON T-EAK-CAV
Available for connection sizes 5" and 4".
Spiral duct and bends are not included
A: Min. length: 30.3 in
B: Min. length: 14.2 in

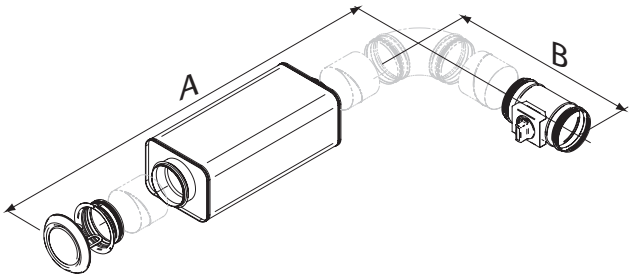

Figure 42. Exhaust air kit, PARAGON T-EAK-CAV
Available for connection sizes 5" and 4".
Spiral duct and bends are not included
A: Min. length: 30.3 in
B: Min. length: 14.2 in

Ordering key

PARAGON WALL Ordering key

Type PARAGON WALL comfort module for cooling, heating, ventilation and control. As standard, factory fitted components are included for plug & play installation.

PARAGON WALL delivery demarcation

Swegon's limits of supply are at the connection points for water.

At these connection points, the RE pipework contractor connects to plain pipe end and/or male threads towards valves, fills the system, bleeds it and tests the pressure in the circuits.

The ventilation contractor connects to the duct connections with dimensions as specified on the basic size drawing in the section "Dimensions".

EE electrical equipment contractor provides a 24 V AC network power supply or earthed 230 V outlets for a transformer, as well as a junction box, if required, installed in a wall for a room thermostat.

The building contractor cuts the openings in corridor wall for the supply air duct, in the interior wall and suspended ceiling for the supply air and extract air grilles and in the bathroom ceiling for the extract air duct.

The electrical contractor connects the power (24V) and signal cables to the connection terminals with spring-loaded snap-in connections.

Maximum cable cross section 2.5 mm2. For safe operation, we recommend cable ends with ferrules.

For connection of electric heating, see the separate installation instructions on www.swegon.se

PARAGON WALL Ordering key

PARAGON WALL	c	aaaa-	b-	ccccc-	d-	ef
Version:						
Length (mm) 775, 900, 1100. 1300 and 1500						
Function B = Cooling and heating						
Capacity variant NC - Normal design HC - High capacity design HC CCO - High capacity design with CCO valve						
Connection side R - Right L - Left						
Flow variant Upper nozzle row: L, M, H Lower nozzle row: L, M, H						

Available to order, kit and accessories

Supply air kit	VAV: PARAGON CRTc motor-driven damper with tight damper blade with damper actuator and CLA sound attenuator
	CAV: PARAGON CRPc manually adjustable damper with perforated damper blade and CLA sound attenuator
Extract air kit	VAV: PARAGON CRTc motor-driven damper with tight damper blade with damper actuator, CLA sound attenuator and extract air register with mounting frame
	CAV: PARAGON CRPc manually adjustable damper with perforated damper blade, CLA sound attenuator and extract air register with mounting frame
Flexible connection hose	Connection hose supplied with clamping ring coupling, push-on coupling or union nut.
Assembly piece	Ceiling mounting bracket and threaded rod for mounting in ceiling. Double threaded rods with thread lock are also available.
Venting nipple	Venting nipple with push-on coupling for connection to the return pipe for water, diameter: 12 mm
For further accessories for the control equipment, see the CONDUCTOR and LUNA product datasheets.	

Ordering key, accessory kit

Supply air kit	PARAGON	c-	T-SAK-VAV-	bbb
Version:				
Kit with motor-driven damper				
Ø4"; Ø5"				

Supply air kit	PARAGON	c-	T-SAK-CAV-	bbb
Version:				
Kit with manually adjustable damper				
Ø4"; Ø5"				

Exhaust air kit	PARAGON	c-	T-EAK-VAV-	bbb
Version:				
Kit with motor-driven damper				
Ø4"; Ø5"				

Exhaust air kit	PARAGON	c-	T-EAK-CAV-	bbb
Version:				
Kit with manually adjustable damper				
Ø4"; Ø5"				

Ordering Key, Accessories

Assembly piece	SYST MS M8-	aaaa-	b
Length of threaded rod (in): 7.9; 19.7; 39.4			
Type: 1=One threaded rod 2=Two threaded rods and one thread lock			

Flexible connection hose, (x1) Clamping ring coupling (Ø12 mm) against pipe at both ends (excl. support sleeves)	SYST FH F1-	aaa-	12
Length (in): 11.8; 19.7; 27.6			

Flexible connection hose, (x1) Quick-fit coupling push-on (Ø12 mm) against pipe at both ends	SYST FH F20-	aaa-	12
Length (in): 10.8; 18.7; 26.6			

Flexible connection hose, (x1) Quick-fit coupling, push-on (12 mm dia.) against pipe on one end, G20ID sleeve nut on the other end.	SYST FH F30-	aaa-	12
Length (in): 7.9; 15.7; 23.6			

Venting nipple	SYST AR12