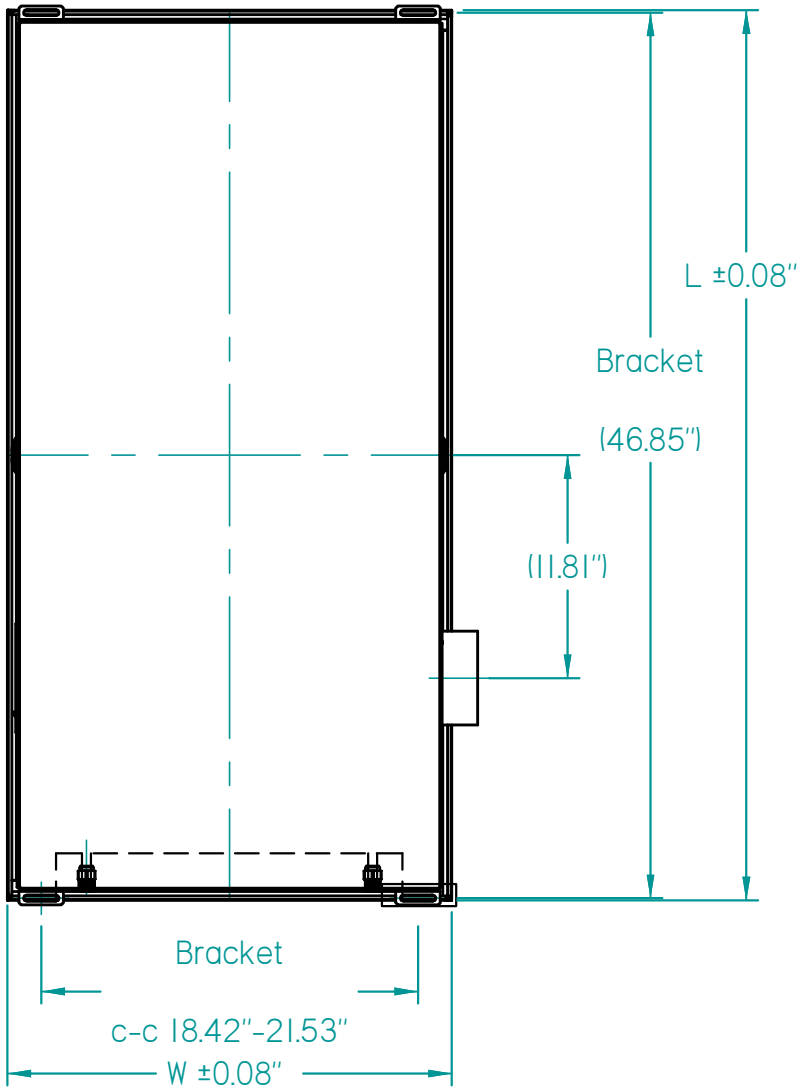

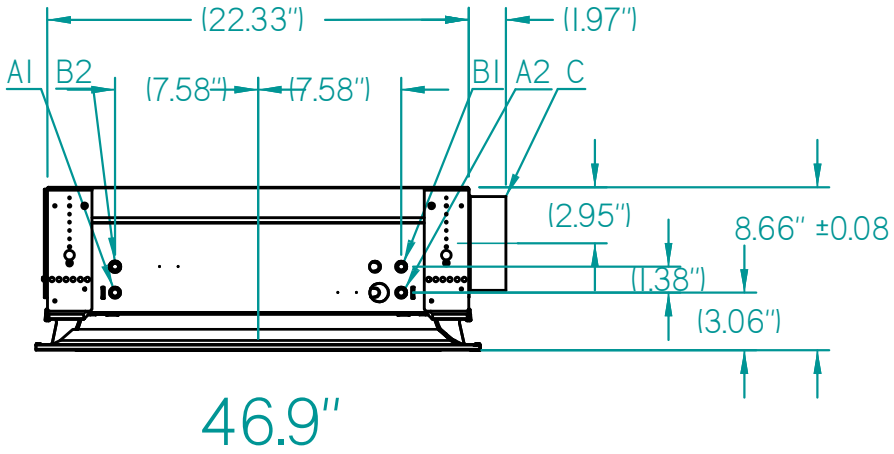

A1= Supply cooling, Ø0.47x0.039" (Cu)
A2= Return cooling, Ø0.47x 0.039" (Cu)
B1= Supply heating, Ø0.47x 0.039" (Cu)
B2= Return heating, Ø0.47x 0.039" (Cu)
C= Air duct Ø4.92", ID.

Var	W	L	Order code
1	23.3	46.9	1192
2	23.5	47.2	1198
3	23.7	47.8	1213
4	24.3	48.9	1242
5	24.5	49.1	1248
6	25.3	50.9	1292
7	26.3	52.8	1342
8	23.0	46.6	1184

* Use Var 3 for Nominal 24" ceiling grid